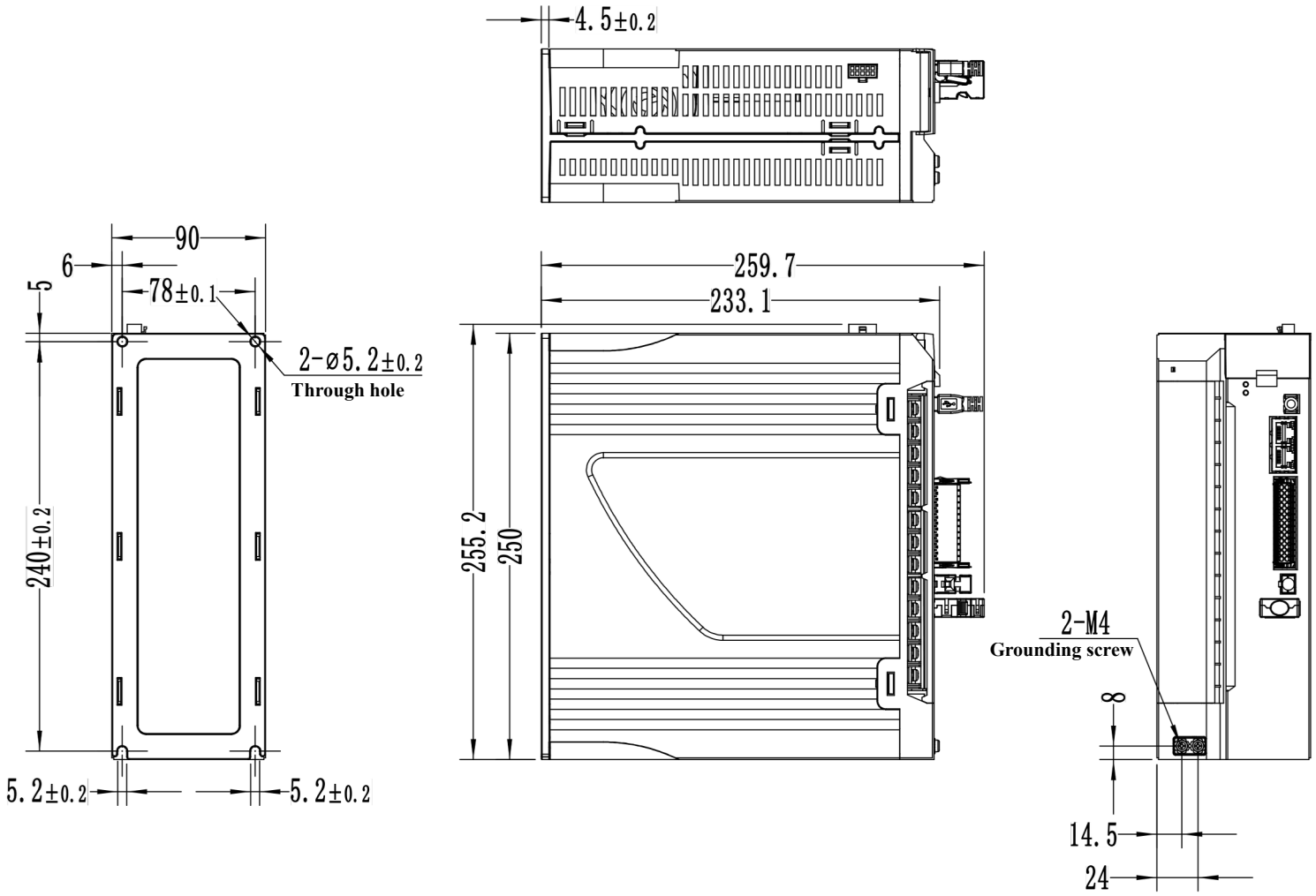

Technical requirements

1. **Net weight: 3.82kg**
2. **Gross weight: 4.62kg**
3. **Unless otherwise specified, dimensional tolerances shall adopt the GB/T1804-m standard**
4. **Unless otherwise specified, geometric tolerances shall adopt the GB/T1184-H standard**

					M56S-321AECX			
A0				2025.04.16				
						Drawing stage	Quality	Scale
Design		Process				D		1:4
Std.		Review				Page 1 of		Total 1 page
Verif.		Date						
Mktg. dept.								

First use model	
A50022	
Unit	
1 / 1	
View	